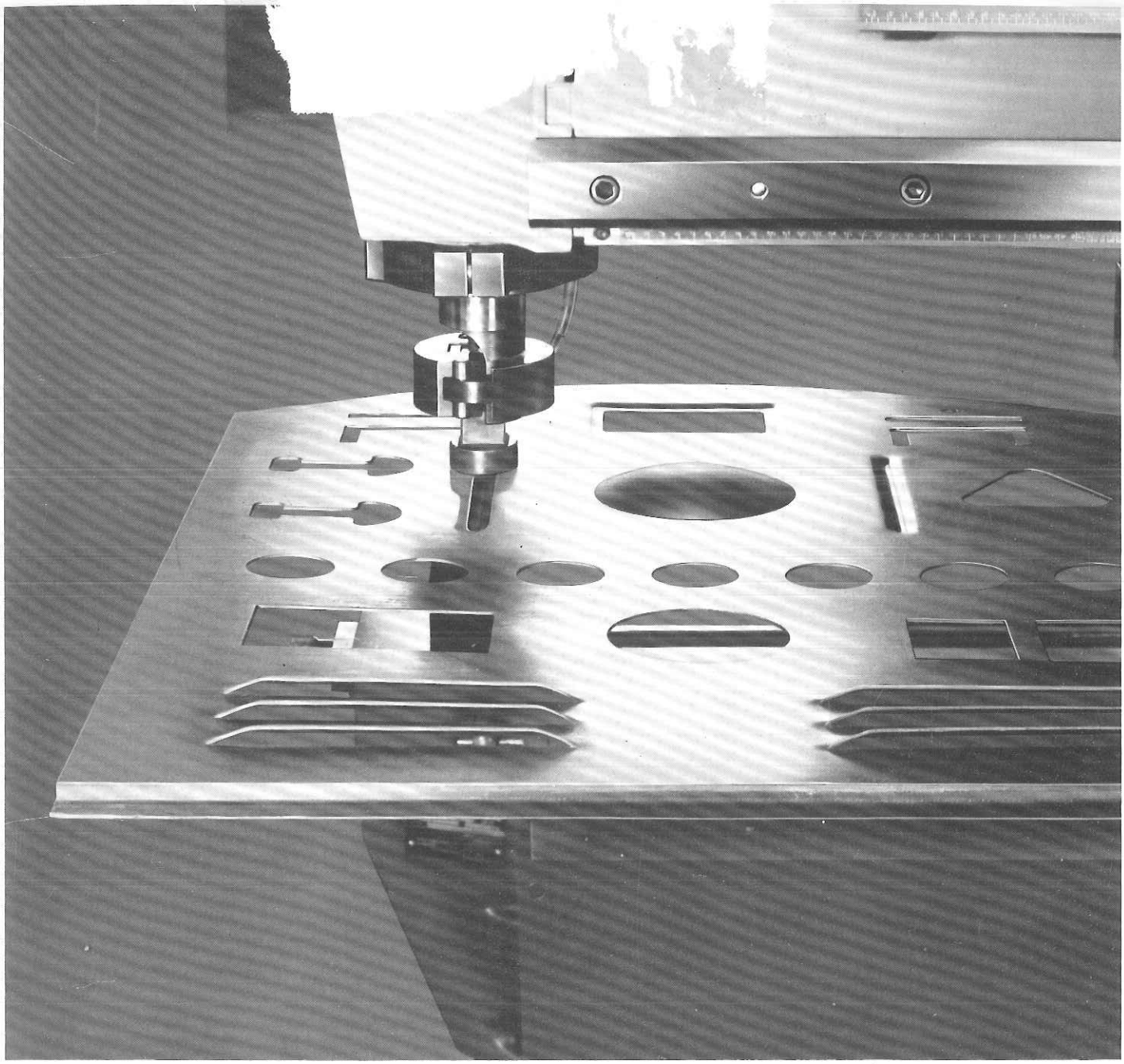

Operations on universal TRUMPF Sheet Metal Working Machines

Sterling MACHINERY EXCHANGE www.SterlingMachinery.com TRUMPF

Contents

Table on Capacities

All the data on the capacities refer to steel sheet of 400 N/mm² = 25 tons/in² tensile strength

		TAS 500	TAS 701	TAS 901	CN 500	CN 701	CN 901	CN 1200a	SUNIMAT 400	CS 75	CS 20a
Nibbling with fixed nibbling tool with solid punch cutting at one side											
from the edge, parting of sheets	mm	–	6.5	7	–	6.5	7	–	–	7	–
inside of sheet **with** starting hole	in	–	1/4	.28	–	1/4	.28	–	–	.28	–
Nibbling with rotary nibbling tool with solid punch cutting at one side											
from the edge, parting of sheets	mm	4	6	6	4	6	6	–	–	6	–
inside of sheet **with** starting hole	in	5/32	15/64	15/64	5/32	15/64	15/64	–	–	15/64	–
inside of sheet	mm	3	4	4	3	4	4	–	–	4	–
without starting hole	in	.12	5/32	5/32	.12	5/32	5/32	–	–	5/32	–
Copy- and coordinate-nibbling with hollow punch cutting all-round, round or square											
from the edge and inside of sheet **with** starting hole											
Round tool 12 mm diameter	mm	–	–	–	3	5	6	12	4	6	12
	in	–	–	–	.12	.2	15/64	15/32	5/32	15/64	15/32
Square tool 12 mm²	mm	–	–	–	3	5	5	10	4	5	10
	in	–	–	–	.12	.2	.2	.4	5/32	.2	.4
Square tool 20 mm²	mm	–	–	–	–	–	–	6	4	–	6
	in	–	–	–	–	–	–	15/64	5/32	–	15/64
inside of sheet **without** starting hole											
Round tool 12 mm diameter	mm	–	–	–	3	4	5	10	4	5	10
	in	–	–	–	.12	5/32	.2	.4	5/32	.2	.4
Square tool 12 mm²	mm	–	–	–	3	4	5	8	4	5	8
	in	–	–	–	.12	5/32	.2	5/16	5/32	.2	5/16
Square tool 20 mm²	mm	–	–	–	–	–	–	5	4	–	5
	in	–	–	–	–	–	–	.2	5/32	–	.2
Punching											
Max. sheet thickness	mm	–	–	–	–	5	6	10	6	3	10
	in	–	–	–	–	.2	15/64	.4	15/64	.12	.4
Circular cut-outs, max. diameter	mm	–	–	–	–	70	70	100	100	70	100
	in	–	–	–	–	2 3/4	2 3/4	4.0	4.0	2 3/4	4.0
Square cut-outs, max. square	mm	–	–	–	–	50	50	71	71	50	71
	in	–	–	–	–	2.0	2.0	2.8	2.8	2.0	2.8
Shearing											
from the edge	mm	5	7	9	5	7	9	12	–	9	12
and parting of sheets	in	.2	.28	.36	.2	.28	.36	15/32	–	.36	15/32
inside of sheet **with** starting hole	mm	5	6	8	5	6	8	12	–	8	12
	in	.2	15/64	5/16	.2	15/64	5/16	15/32	–	5/16	15/32
inside of sheet	mm	5	6	8	5	6	8	10	–	8	10
without starting hole	in	.2	15/64	5/16	.2	15/64	5/16	.4	–	5/16	.4
Slotting	mm	4	6	7	4	6	7	10	–	7	10
	in	5/32	15/64	.28	5/32	15/64	.28	.4	–	.28	.4
Louver cutting	mm	3	4	4	3	4	4	5	2*	4	5
	in	.12	5/32	5/32	.12	.5/32	5/32	.2	.08*	5/32	.2
Beading	mm	3	4	4	3	4	4	5	2*	4	5
	in	.12	5/32	5/32	.12	5/32	5/32	.2	.08*	5/32	.2
Folding	mm	3	3	3	3	3	3	5	2*	3	5
	in	.12	.12	.12	.12	.12	.12	.2	.08*	.12	.2
Internal folding	mm	2	2	2	2	2	2	3	2*	2	3
	in	.08	.08	.08	.08	.08	.08	.12	.08*	.08	.12
Flanging with small flanging tool	mm	1.5-2	1.5-3	1.5-3	1.5-2	1.5-3	1.5-3	1.5-3	–	1.5-3	1.5-3
	in	.06-.08	.06-.12	.06-.12	.06-.08	.06-.12	.06-.12	.06-.12	–	.06-.12	.06-.12
Round flanging	mm	1.5-2	1.5-3	1.5-3	1.5-2	1.5-3	1.5-3	1.5-3	–	1.5-3	1.5-3
	in	.06-.08	.06-.12	.06-.12	.06-.08	.06-.12	.06-.12	.06-.12	–	.06-.12	.06-.12
Semi-round flanging	mm	1.5-2	1.5-3	1.5-3	1.5-2	1.5-3	1.5-3	1.5-3	–	1.5-3	1.5-3
	in	.06-.08	.06-.12	.06-.12	.06-.08	.06-.12	.06-.12	.06-.12	–	.06-.12	.06-.12
Flanging of rectangular workpieces	mm	1.5-2	1.5-3	1.5-3	1.5-2	1.5-3	1.5-3	1.5-3	–	1.5-3	1.5-3
	in	.06-.08	.06-.12	.06-.12	.06-.08	.06-.12	.06-.12	.06-.12	–	.06-.12	.06-.12
Flanging with large flanging output	mm	–	1-4	1-4	–	1-4	1-4	1-6	–	1-4	1-6
	in	–	.04-5/32	.04-5/32	–	.04-5/32	.04-5/32	.04-15/64	–	.04-5/32	.04-15/64
Peening	mm	2-4	2-6	2-6	2-4	2-6	2-6	2-9	–	2-6	2-9
	in	.08-5/32	.08-15/64	.08-15/64	.08-5/32	.08-15/64	.08-15/64	.08-.36	–	.08-15/64	0.8-.36

* These values are approximate only; special request is necessary.

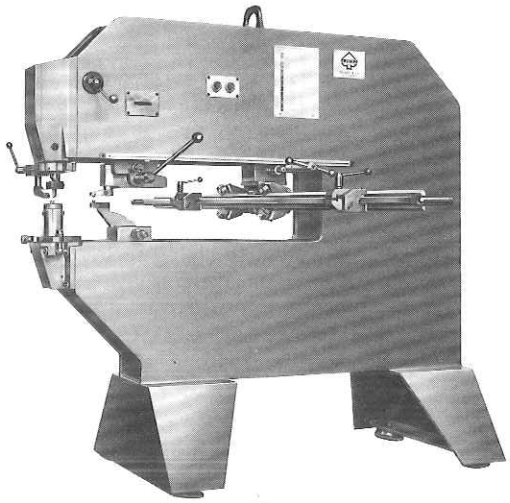

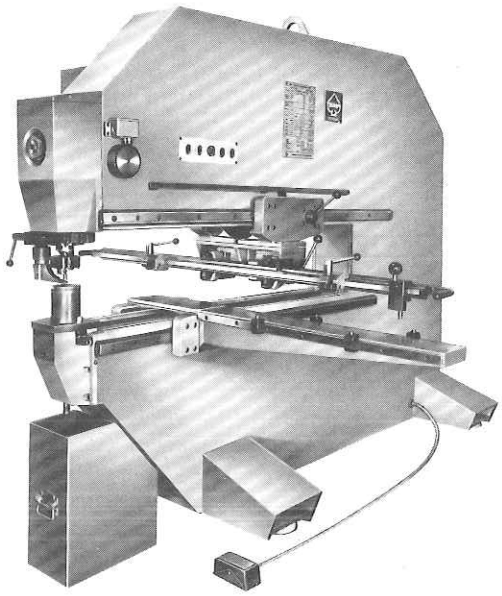

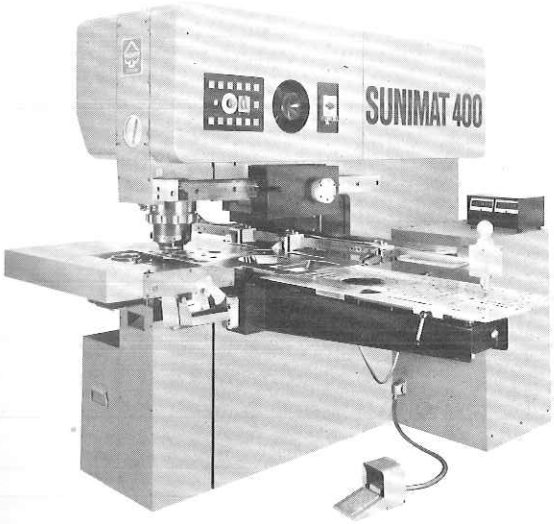

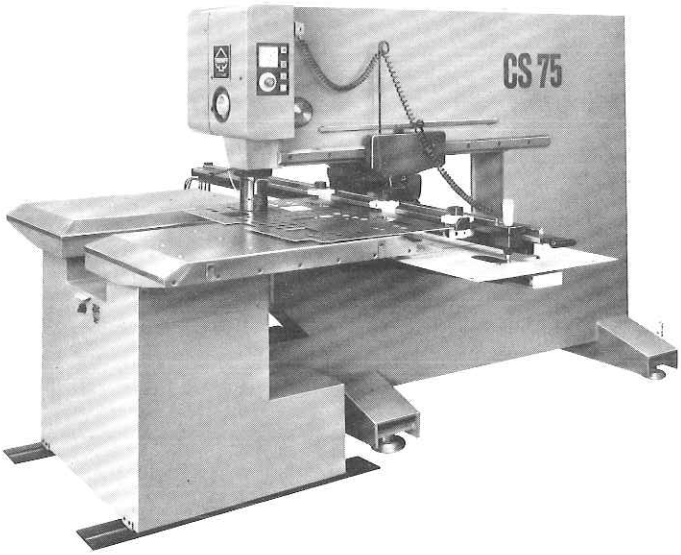

Stationary Sheetmetal Working Machines with Manual Control

Curve, Cutting-out and Nibbling Shears TAS

for short production runs, single pieces and simple workpieces of sheetmetal. Free-hand guiding of workpiece, supported by circle and straight guiding attachments.
Simple tools for shearing, slotting, and nibbling can be used for all fields of the production. Universal application of the machine for louver cutting, beading, folding, flanging, and peening.

Precision Punching and Contour-Nibbling Machine SUNIMAT 400

for making parts in small lot sizes by punching and nibbling. High performance due to quick semi-automatic tool change with hand-held cartridges, servo tracer pin, servo clamping mechanism for coordinate guide and template as well as digital position readout.

Copy and Coordinate Nibbling Machines CN

for working sheetmetal up to 3 mm ($^1/_8$ in), 6 mm ($^1/_4$ in), or 12 mm ($^{15}/_{32}$ in) thick in single pieces and short production runs. Minimum tool costs because all cut-outs are produced by nibbling with **one single** tool. Universal application owing to the forming operations of louver cutting, beading, folding, flanging, and peening.

Copy Punch Presses CS

Economical production, even with medium lot sizes, and minimum tool costs by combining the punching operation with the nibbling process. Field of application: thin sheet metal as well as heavy plate up to 12 mm ($^{15}/_{32}$ in) thick. Universally applicable due to forming operations such as louver cutting, beading, folding, flanging, and peening.

Nibbling

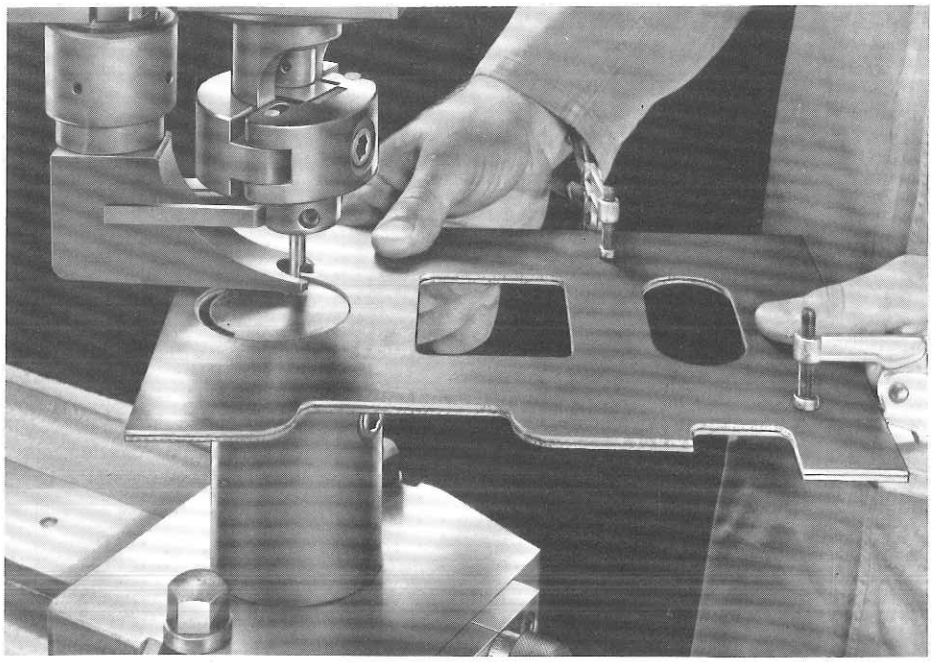

Nibbling is a cutting process with a continuously running tool and a feed motion executed by the operator during the upward movement of the tool.

There are the following nibbling processes:

Free-hand nibbling
with solid punch cutting at one side. When contours are machined, the workpiece or tool is turned according to the direction of cut. Work is carried out to template or scribed line. Guiding attachments can be used for nibbling straight lines and circles.

Copy and coordinate nibbling with hollow punch and guide pin
An all-round cutting punch permits the working of a sheet which is moved in a 2-axis coordinate guide. A guide pin assures tool guidance and feed limitation. As a result, a smooth, burr-free cutting edge is obtained. Tool wear is negligible.

Copy and coordinate nibbling with hollow punch and stop pin
performed on extremely rugged copy punch presses and nibbling machines.
The stop pin system provides for a smooth cutting edge and the rigid tool guidance for a burr-free cut.

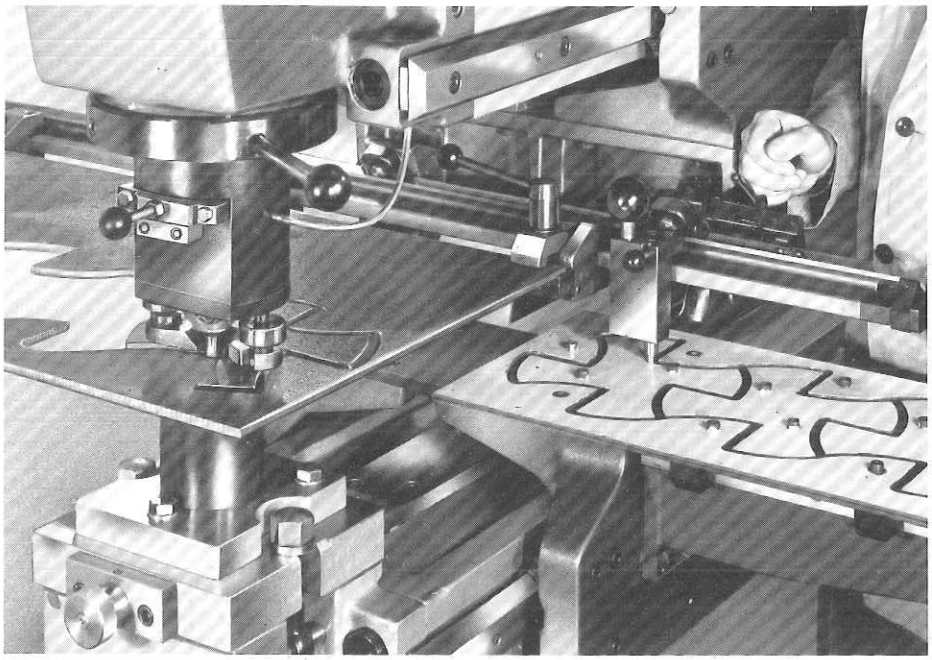

Top
Free-hand nibbling of shaped parts with rotary nibbling tool and solid punch, cutting at one side. Round, square and oval cut-outs as well as any contours can be nibbled to a template clamped on the sheet.

Middle
Copy nibbling of naves from steel sheet 10 mm (.4 in) thick by saving material ("scrap-free nibbling"). Use is made of a template assuring positive guidance of the copy tracer.

Bottom
Template quick-clamping attachment with triangular template. For positioning, the coordinates of the center of the cut-out are set at the scales of the coordinate guide.

Circle guide with angle dial for the production of circles with a diameter of up to 600 mm (24 in).
Upon assembly of a fixing device, it is used for making bevelled straight nibbling edges under any desired angle.

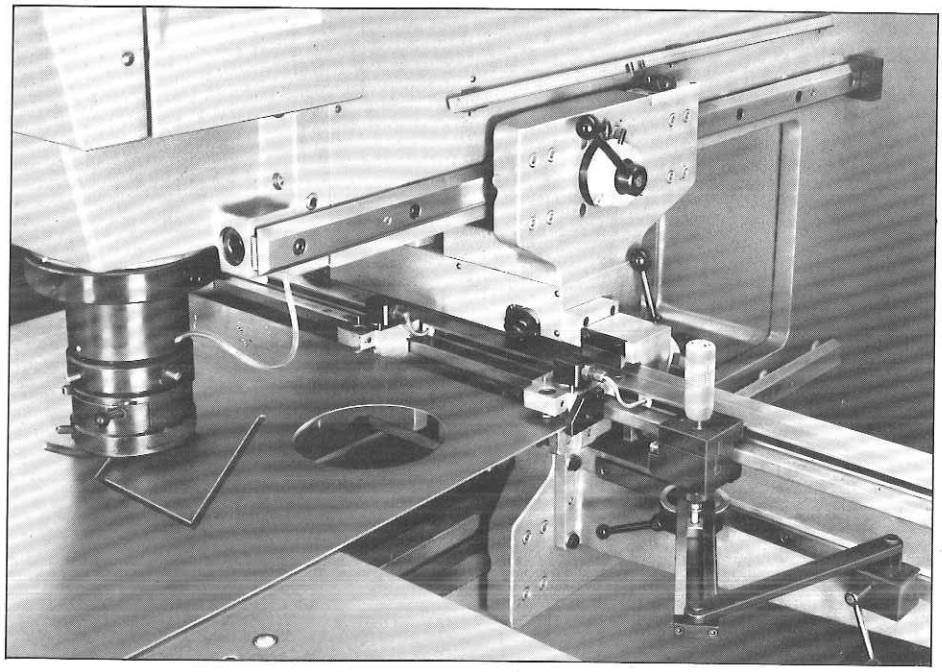

One-side cutting solid punches and dies for the **rotary** nibbling tool of TAS 500, TAS 701, TAS 901
(can also be used on copy nibbling machines).

Figs. from left to right:

Solid punch, cutting at one side, for large feed and thick sheets with guided cuts,
e.g. by using the inside circle guiding attachment or the large straight guiding attachment or when nibbling to template.

Solid punch, cutting at one side, for small feed and thin sheets for free-hand nibbling to scribed line and for nibbling to template.

Stepped solid punch, cutting at one side, for **fixed** nibbling tool for max. nibbling capacities.

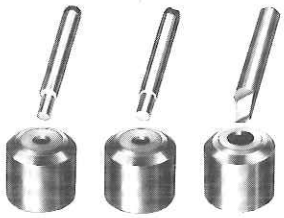

Round and square tools with die and guide pin for CN 500, CN 701, CN 901, CS 75 and SUNIMAT 400
German and foreign patents.

Round hollow punch, cutting all-round, 4, 5, 6, 8, 10, or 12 mm diameter, for copy and coordinate nibbling.

Square hollow punch, cutting at all sides, 10 or 12 mm², for copy and coordinate nibbling.

Stepped round hollow punch, cutting at one side, for nibbling to scribed line (not suitable for SUNIMAT 400).

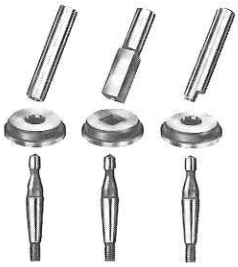

Round and square tools with die and spring-loaded stop pin for CN 1200a and CS 20a
(punching tool adapter for nibbling sheets up to 6 mm = ¼ in thick).

Round hollow punch, cutting all-round, 12 mm diameter, for copy and coordinate nibbling.

Square hollow punch, cutting at all sides, 12 mm², for copy and coordinate nibbling.

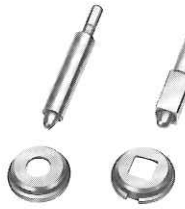

Round and square tools with die and stop pin for CN 1200a and CS 20a (tool adapter for nibbling heavy plate).
German and foreign patents.

Round hollow punch, cutting all-round, 12 mm diameter, for copy and coordinate nibbling.

Square hollow punch, cutting at all sides, 12 mm², for copy and coordinate nibbling.

Stepped round hollow punch, cutting at one side, 12 mm diameter, for nibbling to scribed line.

Square hollow punch, cutting at all sides, 20 mm², for copy and coordinate nibbling.

Punching

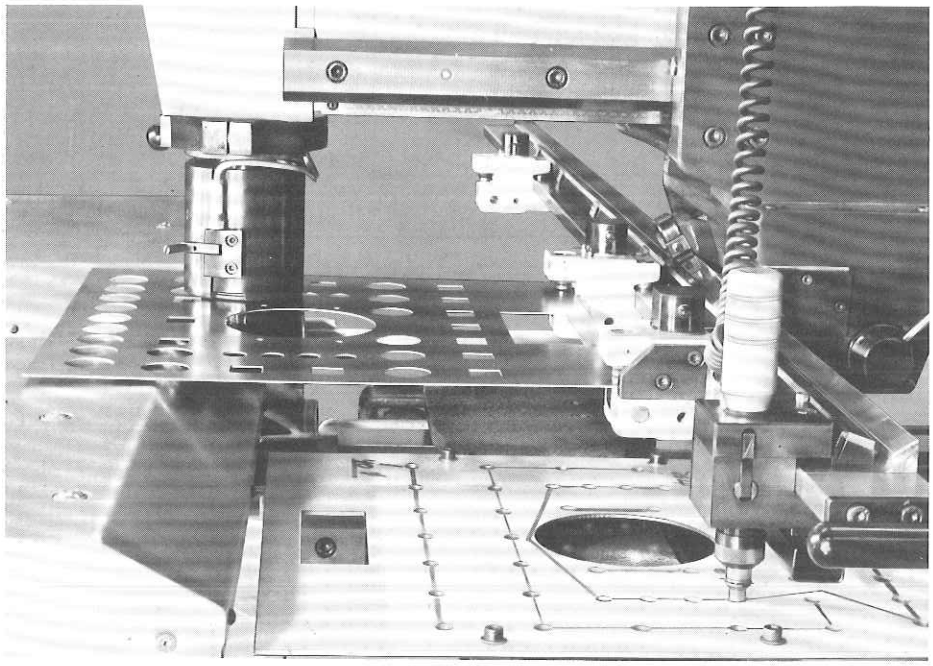

When punching, a complete cut-out is made in one downstroke of the tool.
On the coordinate nibbling machines, the downstroke of the punch is oscillating, whereas on the copy punch presses it takes place in one single stroke using a clutch.
The max. tool diameter and the length of cut are limited by the geometrical dimensions of the tool adapter and the cutting force available. For TRUMPF Copy Punch Presses there is no limitation, since parallel to punching nibbling is also possible.
Depending on the model, the tools are changed manually in 15 to 20 seconds or semi-automatically in 6 to 10 seconds. Forming tools are automatically aligned. The templates required for batch production are also made on the copy punch press.

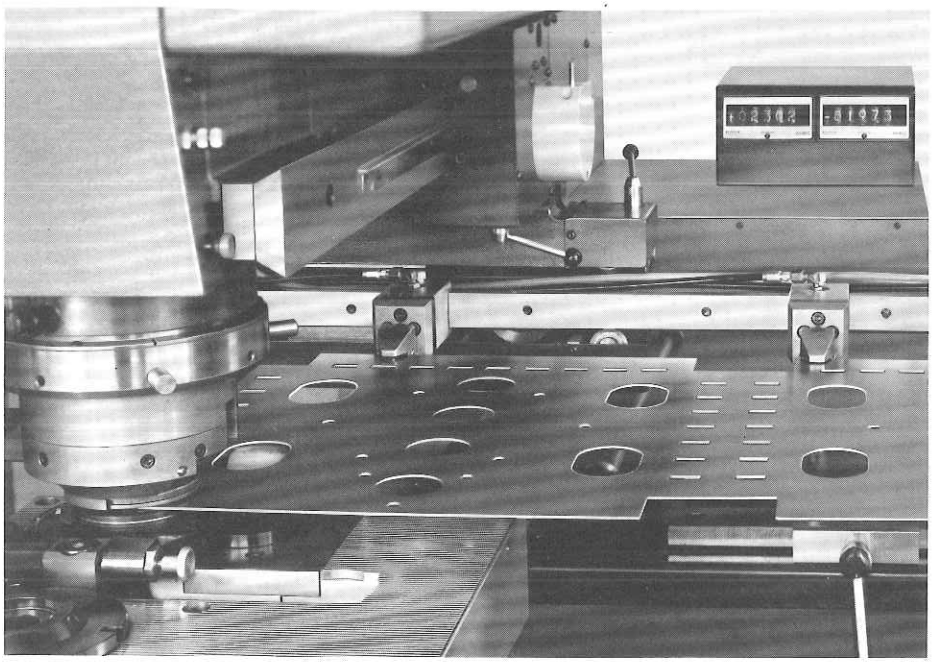

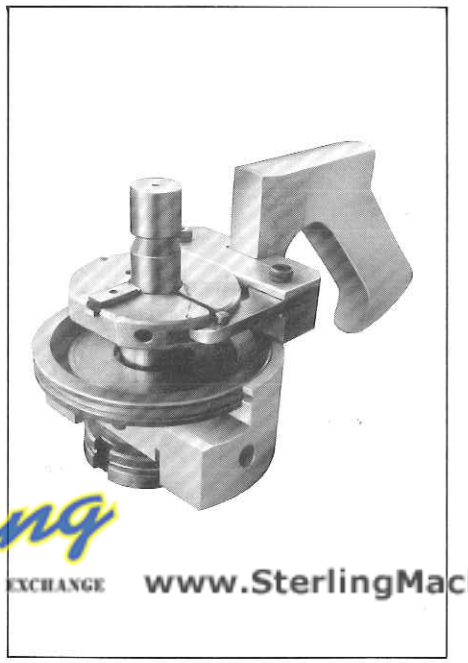

Top
All openings are punched or nibbled on one machine. The "combined" template contains locating bores for the openings to be punched and cut-outs which are traced by the tracer pin when copy nibbling.

Middle
Punching of round and rectangular cut-outs. The sheet is positioned by means of an electronic position readout.

Bottom, left
Manual tool change in about 15 to 20 seconds on CS 75 and CS 20a.

Bottom, right
Cartridge with a punching tool set for semi-automatic tool change in 6 seconds on the SUNIMAT 400.

TRUMPF is offering the ideal tool change for your job: semi-automatic or manual.

Shearing

Shearing is a simple parting process with a shearing tool working in continuous operation at short strokes. A multitude of small steps permits the shearing of curves, too. The simple and rugged tools have a long service life and work without any cutting waste. Shearing tools can be supplied for all TAS, CN and CS machines. Shearing tools with an angle of 16 degrees are used for straight cuts and with an angle of 9 degrees for curve cutting. A certain distortion on the side of the upper tool cannot be avoided. According to the machining problem, the upper tool should therefore be arranged inside or outside.

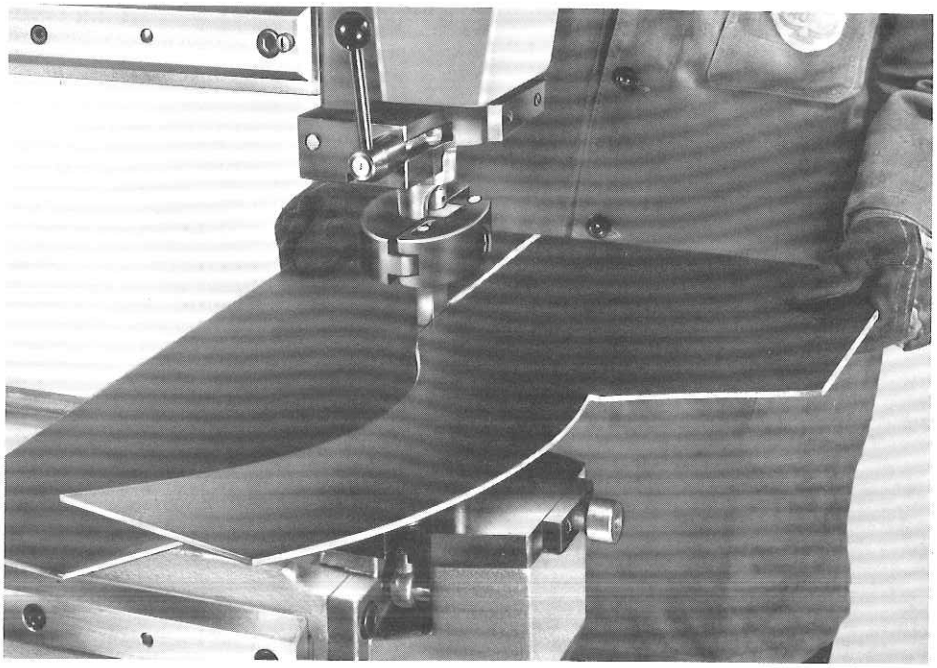

Curve-shearing, free-hand to scribed line.

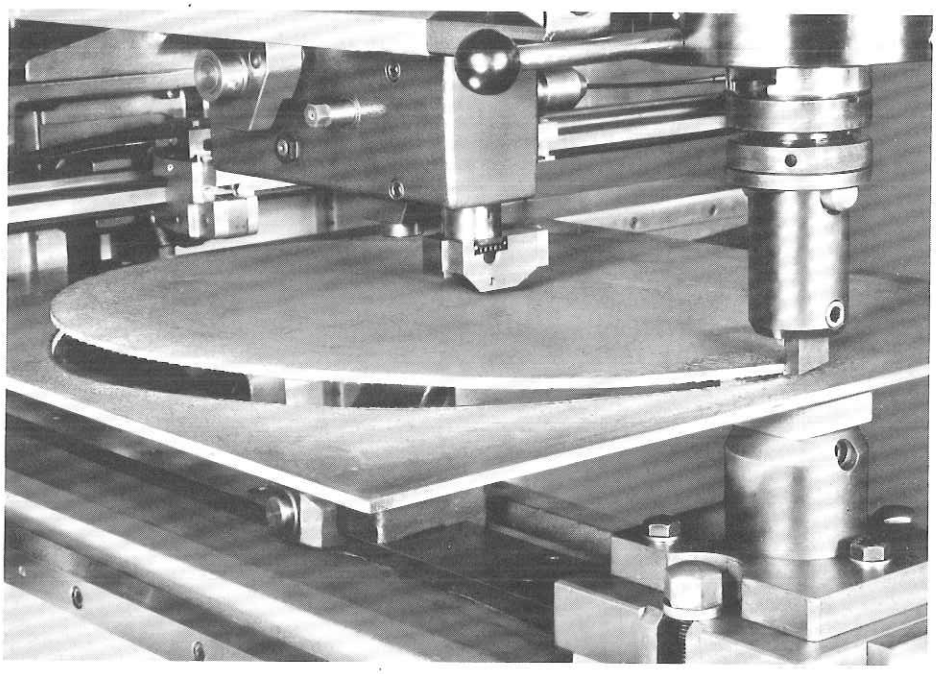

Shearing of a circular blank. The sheet is guided by the inside circle guiding attachment. A centering hole is not required.

In conjunction with an outside circle guiding attachment circular blanks and rings up to 3,000 mm (118 in) dia. can be produced by shearing, nibbling, or slotting.

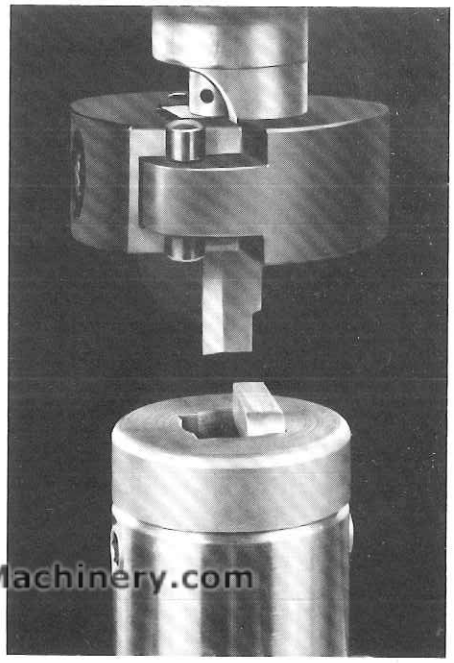

Left
Cutter arrangement with bottom cutter outside. Especially recommended for producing circular openings with the help of the inside circle guiding attachment or for shearing circular blanks with the aid of the outside circle guiding attachment.

Right
Cutter arrangement with bottom cutter inside. Especially recommended for producing circular openings with the help of the outside circle guiding attachment or for shearing circular blanks with the aid of the inside circle guiding attachment.

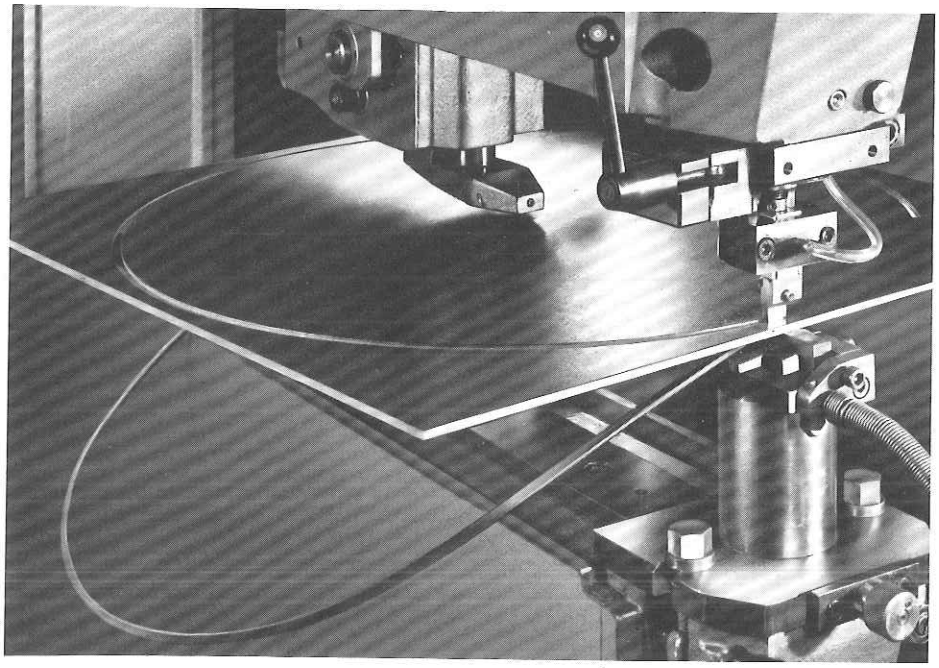

Slotting

Slotting with the patented TRUMPF Slotting Tool is a double-edge shearing which produces parallel, burr-free cutting edges. Neither when piercing nor when cutting off the waste strip the workpiece will be distorted. Especially recommended for the production of strips, circular blanks, and rings, as well as for parting and notching of plates; in short, whenever the material may not show any deformation and a burr-free cut is wanted.
The slotting tool is suitable for various widths of slot. Only the top tool must be exchanged for this purpose, whereas the width of slot of the bottom tool of CN 1200a and CS 20a can be set from 6 to 16 mm ($^1/_4$ to $^5/_8$ in) and on all the other models from 3 to 12 mm ($^1/_8$ to $^1/_2$ in). Slotting with this tool is only possible in one direction. If necessary, the sheet or plate must be turned.

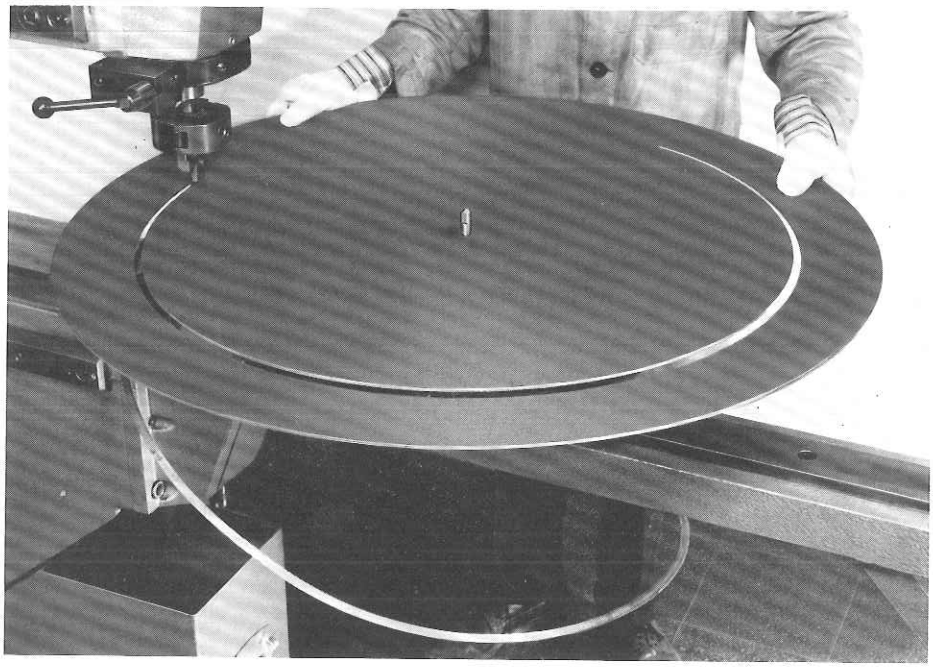

Top
Slotting of a circular blank. The sheet is centered by the inside circle guiding attachment. A centering hole is not required.

Bottom
Slotting of rings up to 3,000 mm (118 in) dia. in conjunction with the outside circle guiding attachment. A centering hole is required.

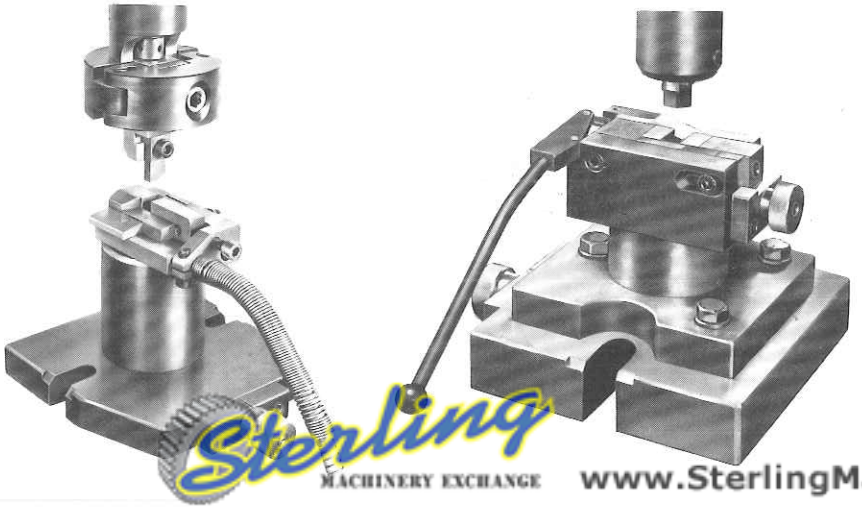

Left
Slotting tool
(German and foreign patents)
for TAS 500, TAS 701, TAS 901,
CN 500, CN 701, CN 901, CS 75,
consisting of:
double-edge top cutter,
bottom side cutters and transverse cutters
width cutter carrier.
Width of slot 3 mm to 12 mm ($^1/_8$ to $^1/_2$ in).
Min. width of slot = sheet thickness.

Right
Slotting tool
(German and foreign patents)
for CN 1200a and CS 20a,
for the parting of sheets 10 mm (.4 in) thick.
Width of slot 6 mm to 16 mm ($^1/_4$ to $^5/_8$ in).

Louver cutting

Louver cutting in continuous operation is a combined shearing and forming process. First of all the length of the intended louver is cut in the sheet. Then the louver is made with the forming portion of the tool. The length of the louver is independent of the louver cutting tool.
Louvers are mainly employed in the manufacture of chemical apparatusses and in air conditioning, but also in connection with switchboards and switch cabinets.
Louvers of limited length are made with punching tools for louvers in single stroke operation on copy punch presses.

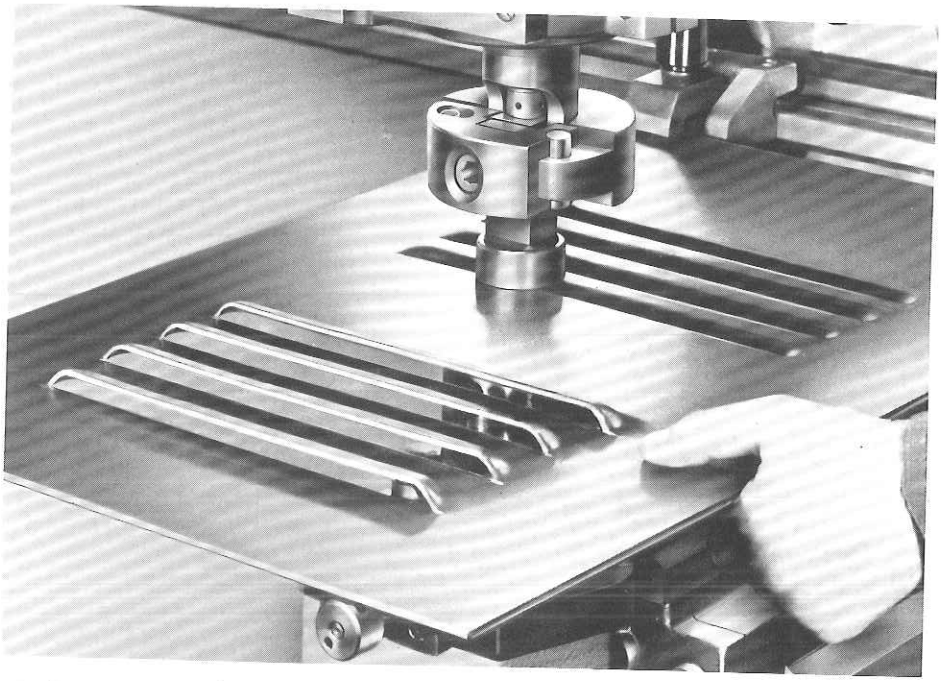

Production of louvers in continuous operation. The workpiece is guided by the coordinate guide or the straight guiding attachment.

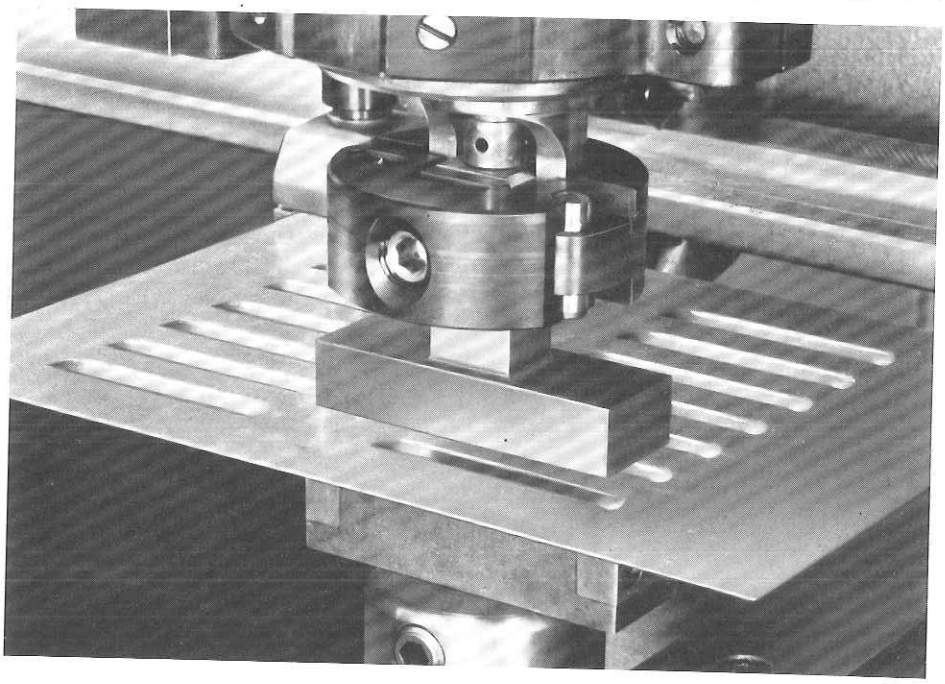

Quick and rational production of ventilating slots with the punching tool for louvers. The louver is punched and formed in one operation.

The punching tool for louvers is available in two standard dimensions:
b x t = 12 x 5 mm (.48 x .2 in), 60 mm (2.4 in) long, for CN 901, CN 1200a, CS 75, CS 20a,
b x t = 15 x 7 mm (.6 x .28 in), 90 mm (3.6 in) long, for CN 1200a, CS 20a.
The sheet thickness range for both tools is 0.8 to 2.5 mm (.032 to .1 in).

Louver cutting tool, consisting of punch and die for the production of louvers with continuous stroke.

Sheet thickness s		Dimensions b x t		
mm	in	mm	in	
0,5-2	.02-.08	15 x 6	.6 x .24	TAS 500, TAS 701, TAS 901, CN 500, CN 701, CN 901, CS 75
2-3	.08-.12	20 x 10	.8 x .4	TAS 500, CN 500
2-4	.08-.16	20 x 10	.8 x .4	TAS 701, TAS 901, CN 701, CN 901, CS 75
2-5	.08-.2	20 x 10	.8 x .4	CN 1200a, CS 20a

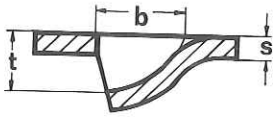

Other dimensions and special tools on request.

Beading

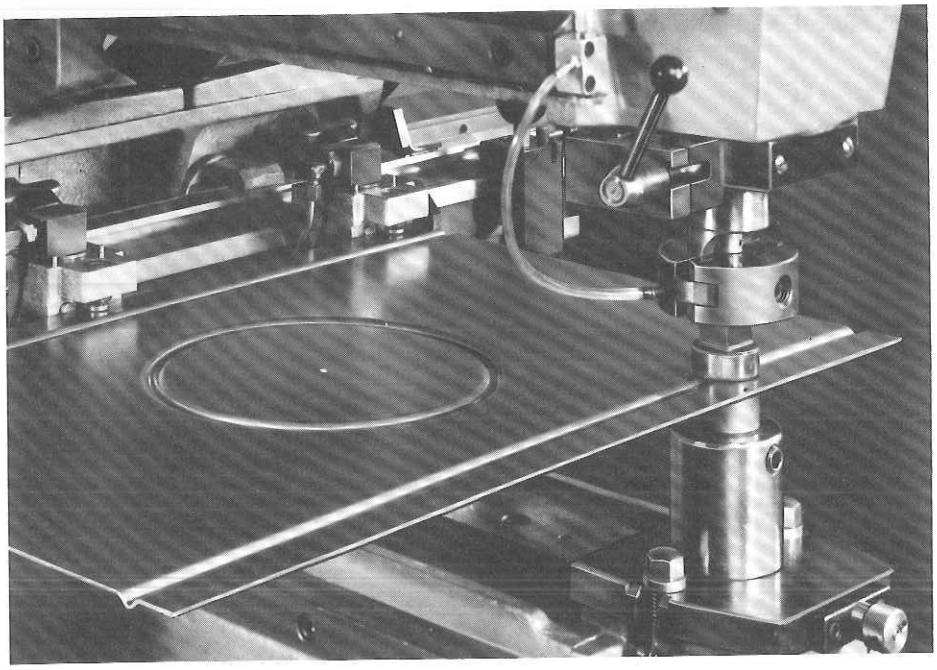

Beading is a pure forming operation for reinforcing sheets. Mostly the bead is pressed into the sheet in two to three stages. After every stage the tool plunger with the beading punch is fed further towards the workpiece. The bead can be made in straight direction, in rays or in curves.
Beading must be carried out free-hand for curves of any type. Narrow curves are produced with semi-spherically shaped top tools, straight lines and flat curves with "bean"-shaped top tools.

Reinforcing of a sheet by impressing several straight beads.

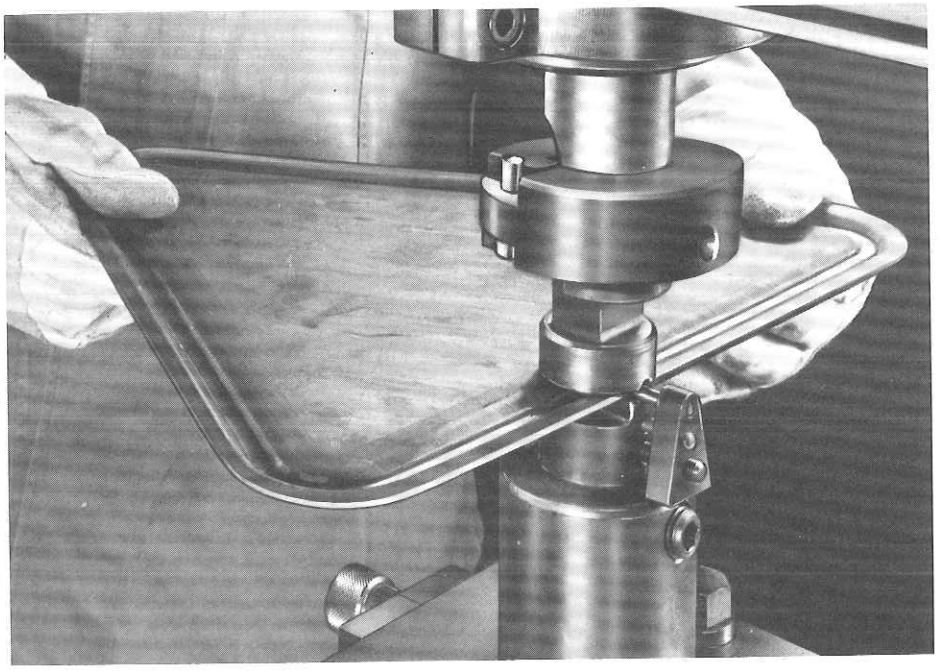

Beading of a triangular cover plate, free-hand to stop.

Sheet thickness s		Dimensions a x b		
mm	in	mm	in	
0,5-2	.02-.08	6x3	.24x.12	TAS 500, TAS 701, TAS 901, CN 500, CN 701, CN 901, CS 75
1,5-3	.06-.12	10x5	.4x.2	TAS 500, TAS 701, TAS 901, CN 500, CN 701, CN 901, CN 1200a, CS 75, CS 20a
3	.12	15x7,5	.6x.3	TAS 500, CN 500
3-4	.12-.16	15x7,5	.6x.3	TAS 701, TAS 901, CN 701, CN 901, CS 75
3-5	.12-.2	15x7,5	.6x.3	CN 1200a, CS 20a

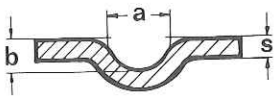

Beading tool, consisting of punch and die.

Other dimensions and special tools on request.

Folding
Internal folding

Sheet metal working offers a wide field of applications for folding. Straight or circular folding is possible at outer or inner edges or even inside of sheet. Folding will help to reinforce or deepen sheet metal constructions, for instance for inserting windows or drip pans in bars, as well as covers or doors.
Ducts, used for instance for covering wires, can be made by double folding.

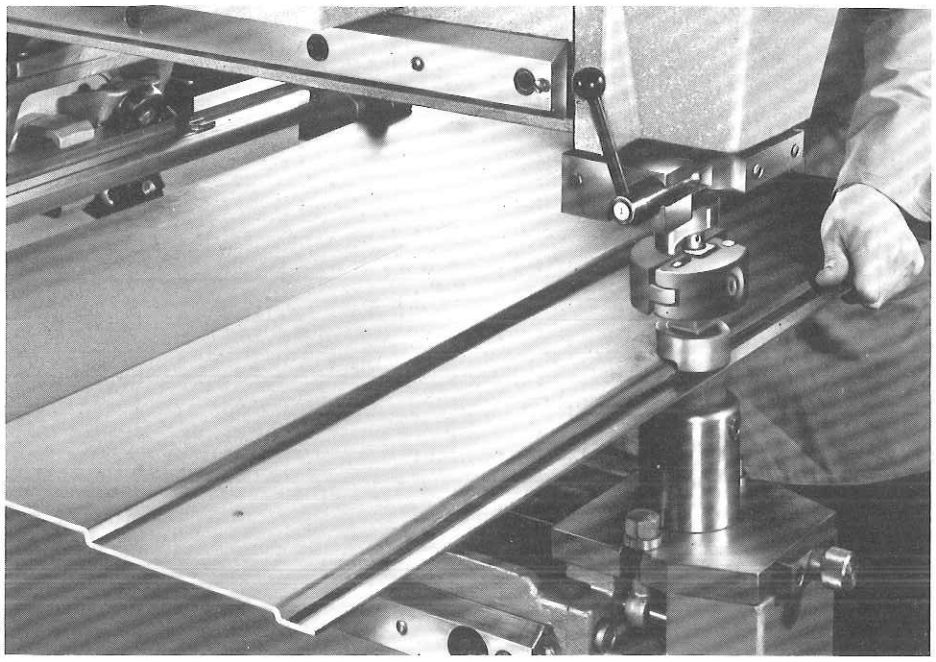

Folding in conjunction with the coordinate guide or the straight guiding attachment.

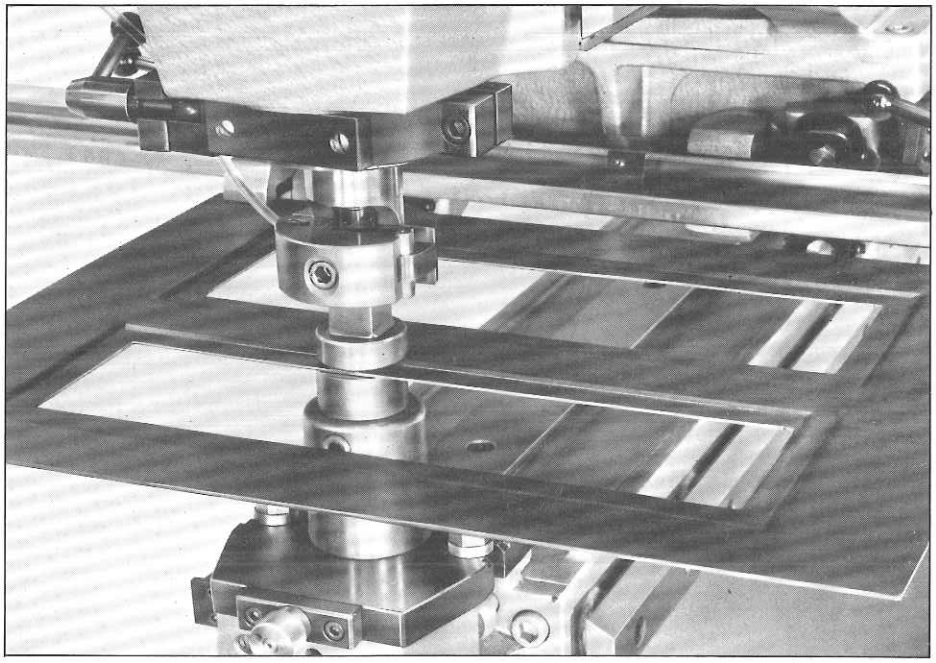

Deepening of a sheet by internal folding with the internal folding tool.

Folding tool, consisting of punch and die.

Internal folding tool, consisting of punch and die.

Sheet thickness s		Folding depth t		
mm	in	mm	in	
0,5-1,5	.02-.06	2	.08	TAS 500, TAS 701, TAS 901, CN 500, CN 701, CN 901, CN 1200a, CS 75, CS 20a
1,5-3	.06-.12	8	.32	TAS 500, TAS 701, TAS 901, CN 500, CN 701, CN 901, CS 75
1,5-5	.06-.2	8	.32	CN 1200a, CS 20a
0,5-2	.02-.08	3	.12	TAS 500, TAS 701, TAS 901, CN 500, CN 701, CN 901, CS 75
1,5-3	.06-.12	3	.12	CN 1200a, CS 20a

Other dimensions and special tools on request.

Flanging

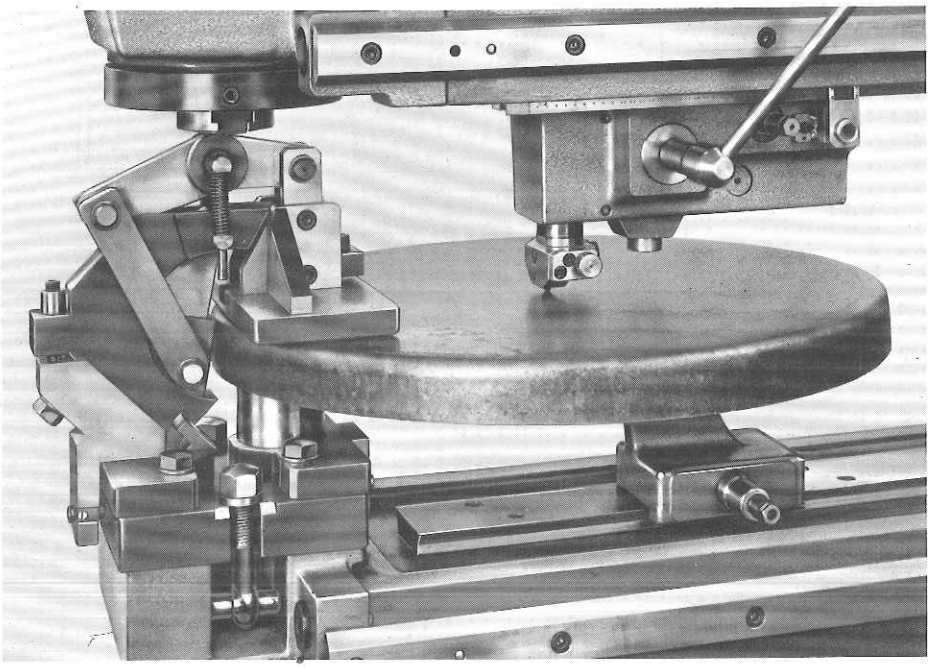

Flanging is a forming process. Sheet metal edges are flanged in a simple way with the aid of straight guiding attachments, as well as inside and outside circle guiding attachments. No special skill of the operator will be required. Trained operators may also flange free-hand along any curves. The critical degree of deformation has been reached when the height of flange is more than ten times the value of the material thickness.
Different tools are available, according to the thickness of material and the shape of the flange.

Outside flanging of a circular blank with the large flanging outfit.
The disc to be flanged is centered by the inside circle guiding attachment.

The inside circle guiding attachment can also be supplied with centerless centering so that marks of the centering point will be avoided. Only suitable for workpieces up to 3 mm (1/8 in) thick.

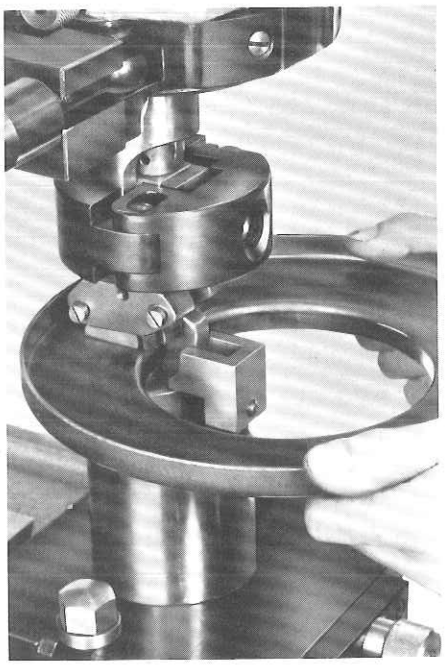

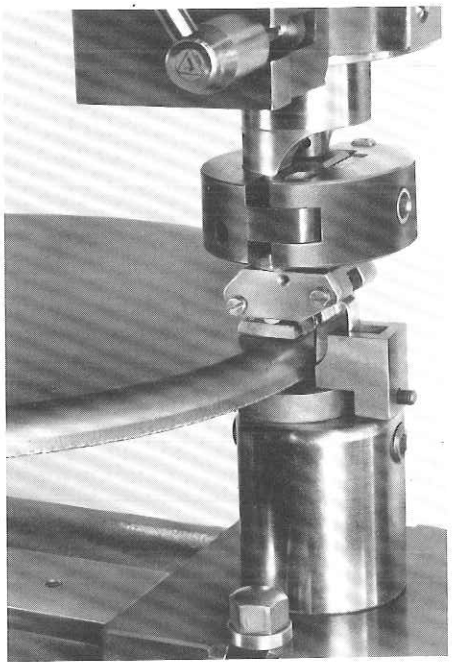

Middle, left
Inside flanging of rings, free-hand, with small flanging tool.

Middle, right
Flanging of a circular blank with round flanging tool.

Left
Flanging with fixed semi-round flanging tool.

Right
Inside and outside flanging with rectangular flanging tool with rectangular die in conjunction with the large straight guiding attachment on ball bearings or the coordinate guide with special clamps.

Outside flanging of a tank bottom with the large flanging outfit.
The bottom, which has already been formed, is centered by means of an outside circle guiding attachment.

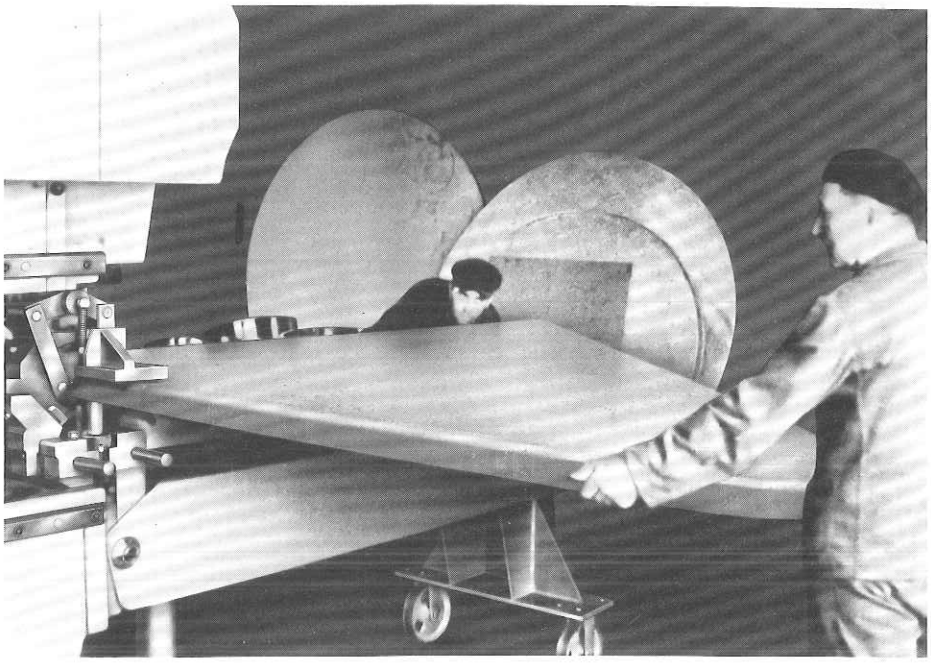

Illustrations of flanging tools from top to bottom:

Large flanging outfit for high flanges

Small flanging tool

Round flanging tool (German patent)

Fixed semi-round flanging tool

Rectangular flanging tool (German patent)

Special tools and other dimensions upon request.
Radius R can be freely selected and has to be stated when ordering.

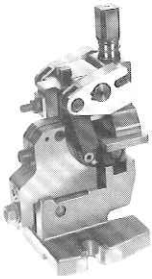

Sheet thickness s mm	in	Flanging height h mm	in	Radius R mm	in	Flanging angle	
							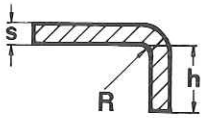
1-4	.04-.16	5-35	.2-1.4	2-30	.08-1.2	90°	TAS 701, TAS 901, CN 701, CN 901, CS 75
1-6	.04-.24	10-60	.4-2.4	2-30	.08-1.2	90°	CN 1200a, CS 20a
							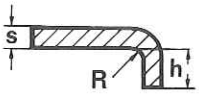
1,5-2	.06-.08	8-10	.32-.4	2	.08	90°	TAS 500, CN 500
1,5-3	.06-.12	8-12	.32-.48	2	.08-1.2	90°	TAS 701, TAS 901, CN 701, CN 901, CN 1200a CS 75, CS 20a
							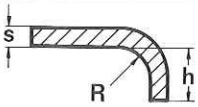
1,5-2	.06-.08	12-15	.48-.6	2, 6, 12	.08, .24, .48	90°	TAS 500, CN 500
1,5-3	.06-.12	14-18	.56-.72	2, 6, 12	.08, .24, .48	90°	TAS 701, TAS 901, CN 701, CN 901, CN 1200a CS 75, CS 20a
							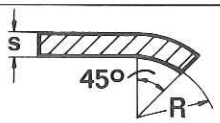
1,5-2	.06-.08	–	–	10-50	.4-2	45°	TAS 500, CN 500
1,5-3	.06-.12	–	–	10-50	.4-2	45°	TAS 701, TAS 901, CN 701, CN 901, CN 1200a CS 75, CS 20a
							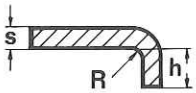
1,5-2	.06-.08	8-10	.32-.4	2	.08	90°	TAS 500, CN 500
1,5-3	.06-.12	8-12	.32-.48	2	.08	90°	TAS 701, TAS 901, CN 701, CN 901, CN 1200a CS 75, CS 20a

Peening

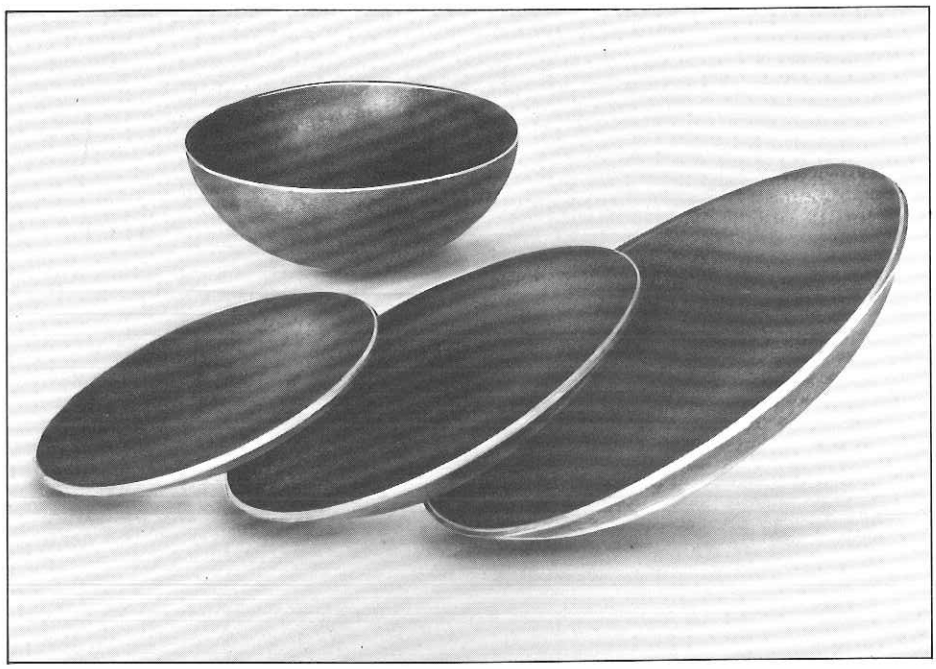

Peening (also termed dishing) is an embossing process for producing dished parts, such as tank bottoms, etc.
The operation is very simple: By using the corresponding tools, consisting of top and bottom tool (punch and die), the bottom portion of the workpiece is drawn and the top portion upset at the same time.
The max. dia. of the disc to be peened is about 250 mm (10 in).

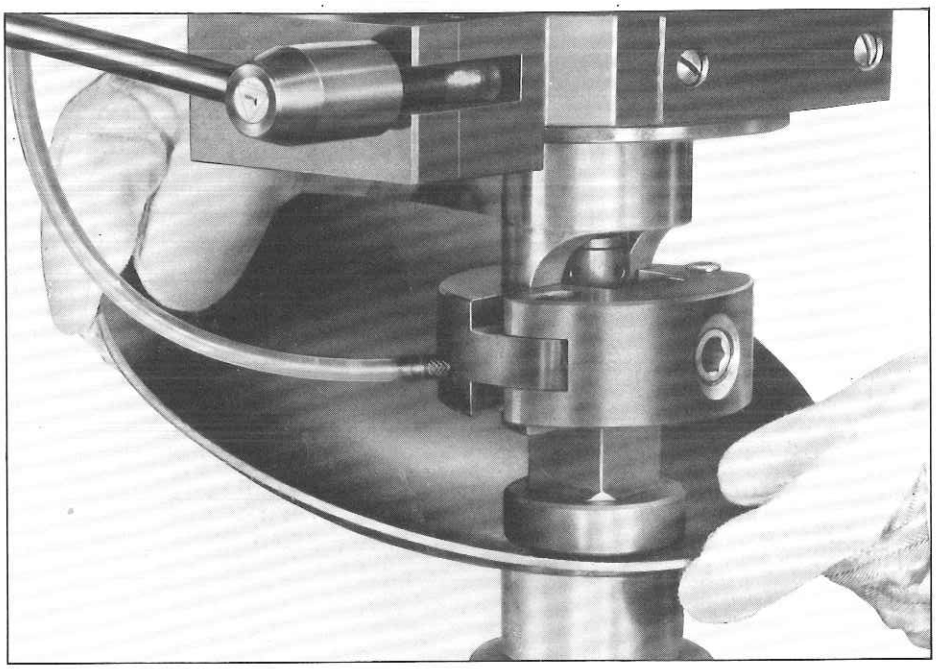

Peening (dishing) of a tank bottom.

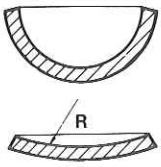

Figs. from left to right:

Peening tool, consisting of punch and die, for disc up to 250 mm (10 in) dia.
Radius R = 90 mm (3.6 in).
Available for all models.

Peening tool for semispherical dishes of discs up to 250 mm (10 in) dia.
Available for all models.

Peening tool for discs of 250 mm (10 in) dia. and over.
Radius R = 200 mm (8 in).
Available for all models.

Auxiliary equipment

Simple, precision-adjustable stop for the longitudinal and transverse direction of the coordinate guide at Copy and Coordinate Nibbling Machines as well as Copy Punch Presses Models CN 500, CN 701, CN 901, CN 1200a, SUNIMAT 400, CS 75, and CS 20a
The setting accuracy of the precision-adjustable stop is 0.1 mm (.004 in).

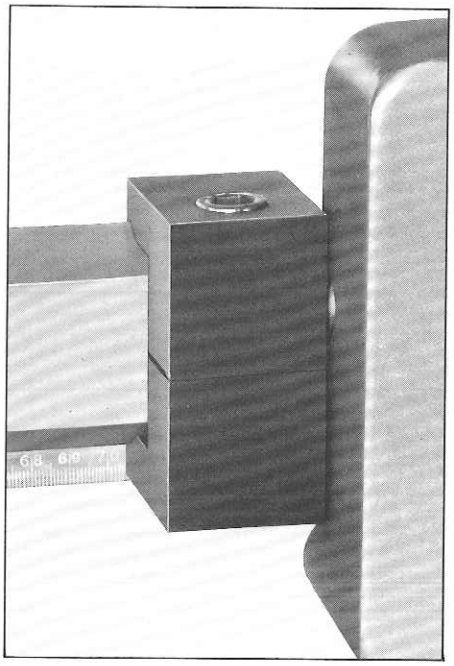

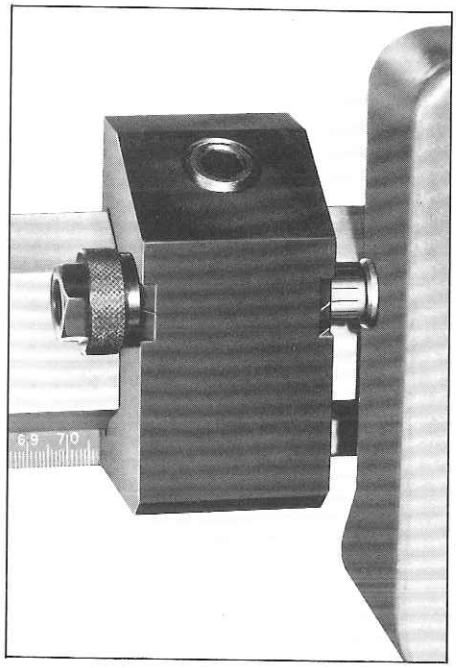

Vernier lens for the longitudinal and transverse direction of the coordinate guide for CN 701, CN 901, and CS 20a.
Reading accuracy 0.1 mm (.004 in).

For Models CS 75 and SUNIMAT 400, reading pointers are available for the longitudinal and transverse direction with vernier 19 mm (.76 in) long and punch symbol, however, without lens.
Reading accuracy 0.1 mm (.004 in).

Both accessories are favourable for accurate positioning when punching templates and in conjunction with precision-adjustable stops for making precise rectangular internal cut-outs by nibbling.

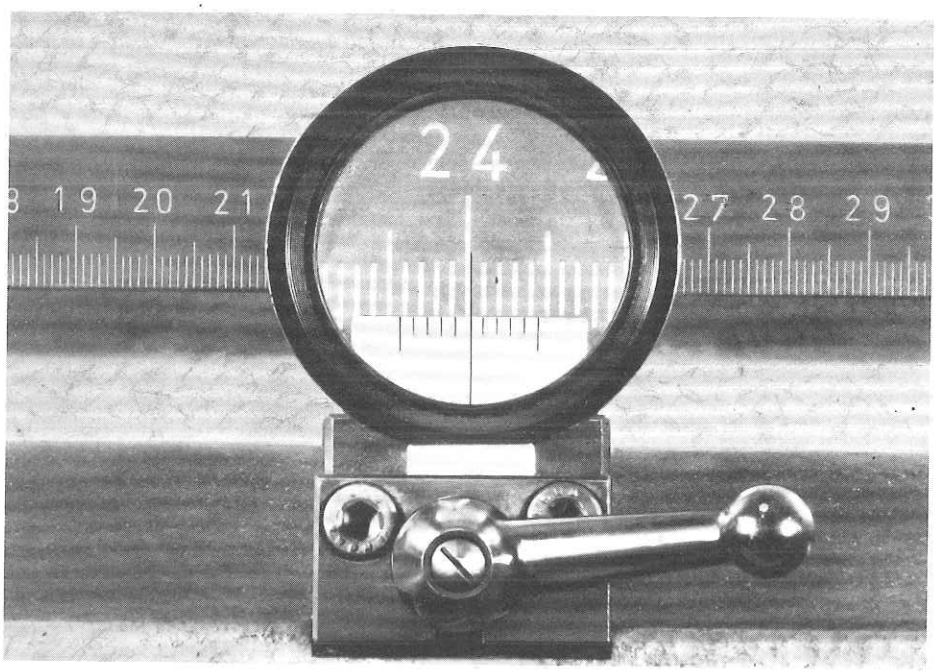

For the production of precise workpieces or templates, the Copy Punch Press CS 20a can be equipped with a precision-adjustment device for the clamping mechanism in both axes of the coordinate guide.
The precision-adjustment device is especially advantageous when being combined with a vernier lens.

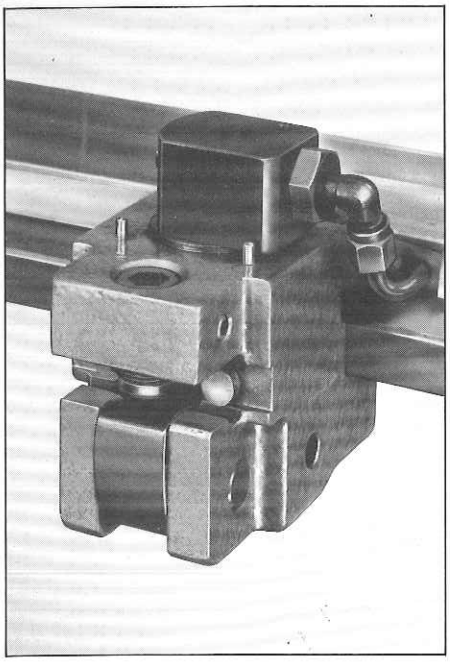

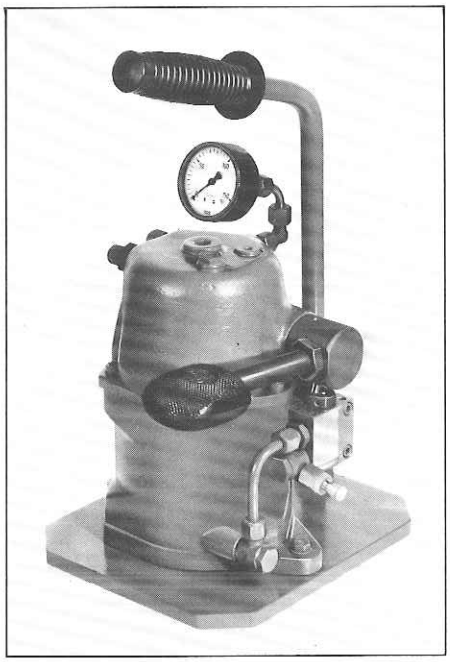

Hydraulic workpiece clamping mechanism with mechanically or pneumatically operated hydro clamping pump, 3 hydraulic clamps and pressure gauge.

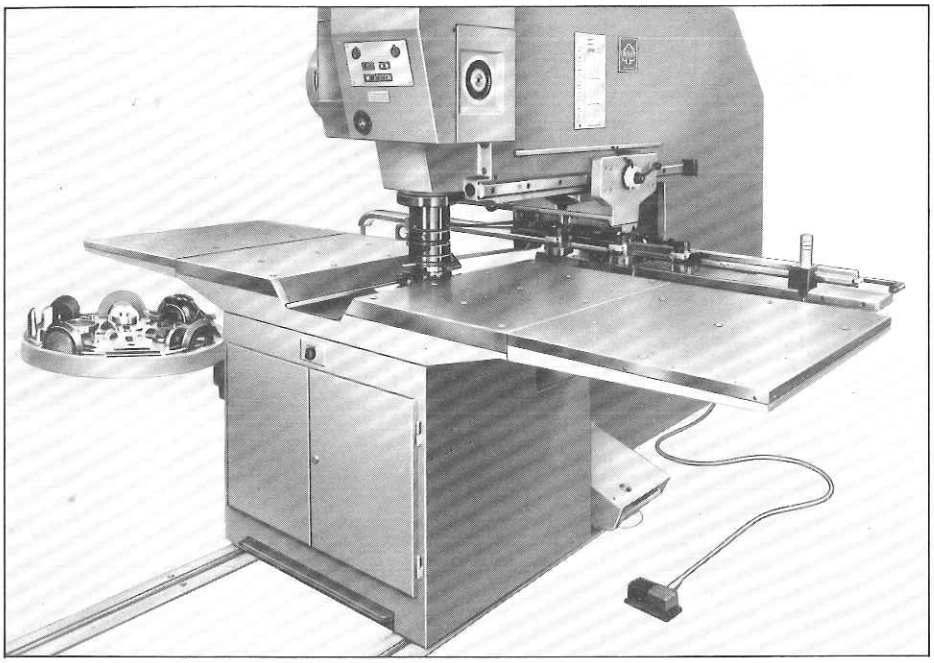

Motor-driven supporting table with electrical follow-on control, ball rollers in the table surface and lockable tool compartment. Table area with two detachable side portions 875 x 3,000 mm (34 1/2 x 118 in). Suitable for working large sheets to increase the working accuracy. Available for Models CN 1200a, CS 20a. The table can also be supplied without motor drive.

For Models CN 701, CN 901, and CS 75, a motor-driven supporting table of similar design is also available.

Polar coordinate guide for the production of circle-like, spiral, or elliptical outside contours by tracing a template at the nibbling punch.

To machines and tools are subject to changes due to continuing development

TRUMPF AMERICA INC.

Sterling MACHINERY EXCHANGE www.SterlingMachinery.com

Farmington Industrial Park · Farmington, Conn. (06032) · Tel. (203) 677-9741 · Telex 9-9376